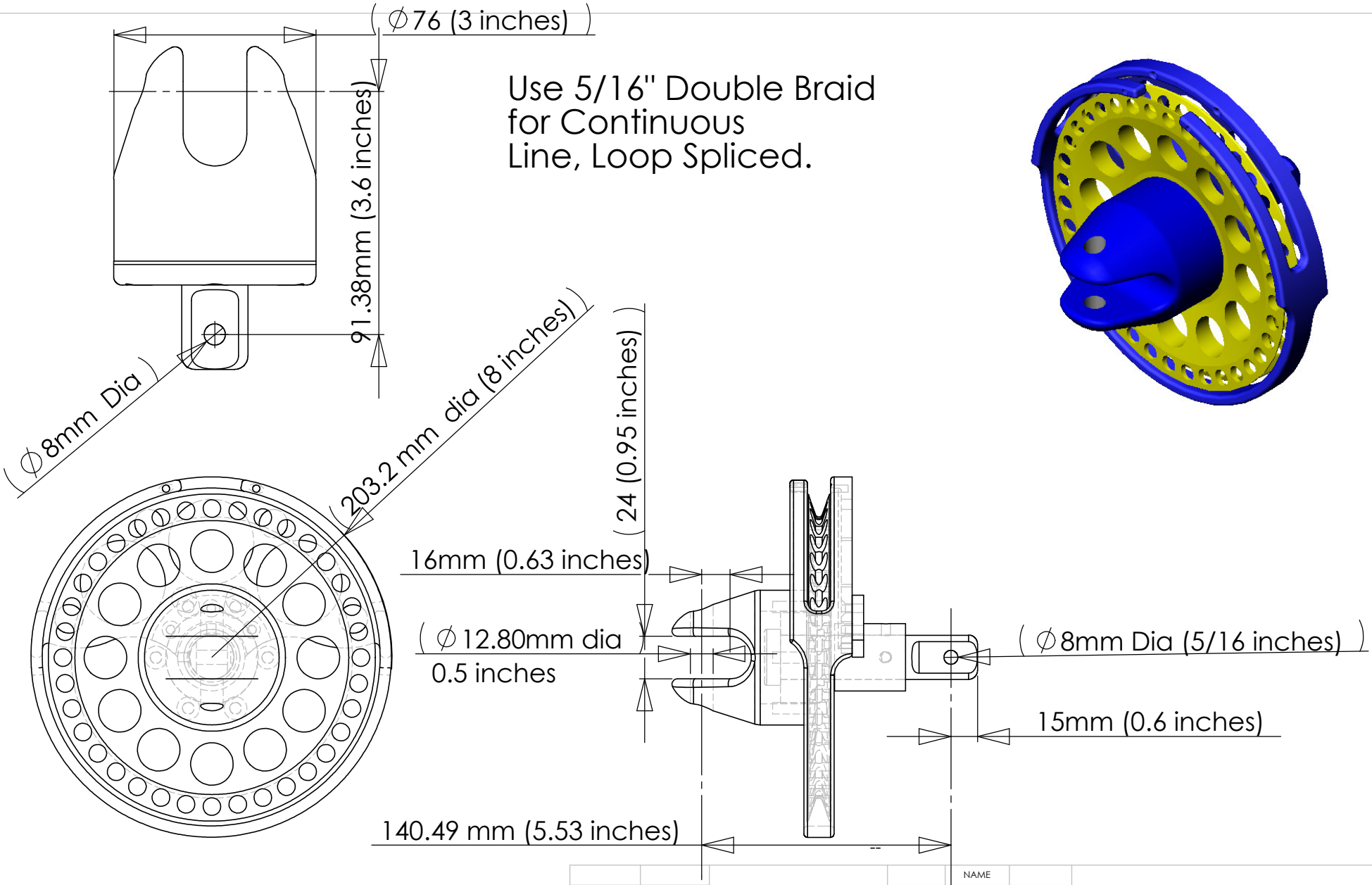

Use 5/16" Double Braid for Continuous Line, Loop Spliced.

PROPRIETARY AND CONFIDENTIAL

THE INFORMATION CONTAINED IN THIS DRAWING IS THE SOLE PROPERTY OF COLLIGO ENGINEERING AND DESIGN, LLC. ANY REPRODUCTION IN PART OR AS A WHOLE WITHOUT THE WRITTEN PERMISSION OF <INSERT COMPANY NAME HERE> IS PROHIBITED.

				NAME
			DRAWN	
			CHECKED	
			ENG APPR.	
			MFG APPR.	
		MATERIAL	Q.A.	
NEXT ASSY	USED ON	FINISH	COMMENTS:	
APPLICATION		DO NOT SCALE DRAWING		

Colligo marine

CN5 Furler

SIZE A		REV.
SCALE:1:5	WEIGHT:	SHEET 1 OF 1