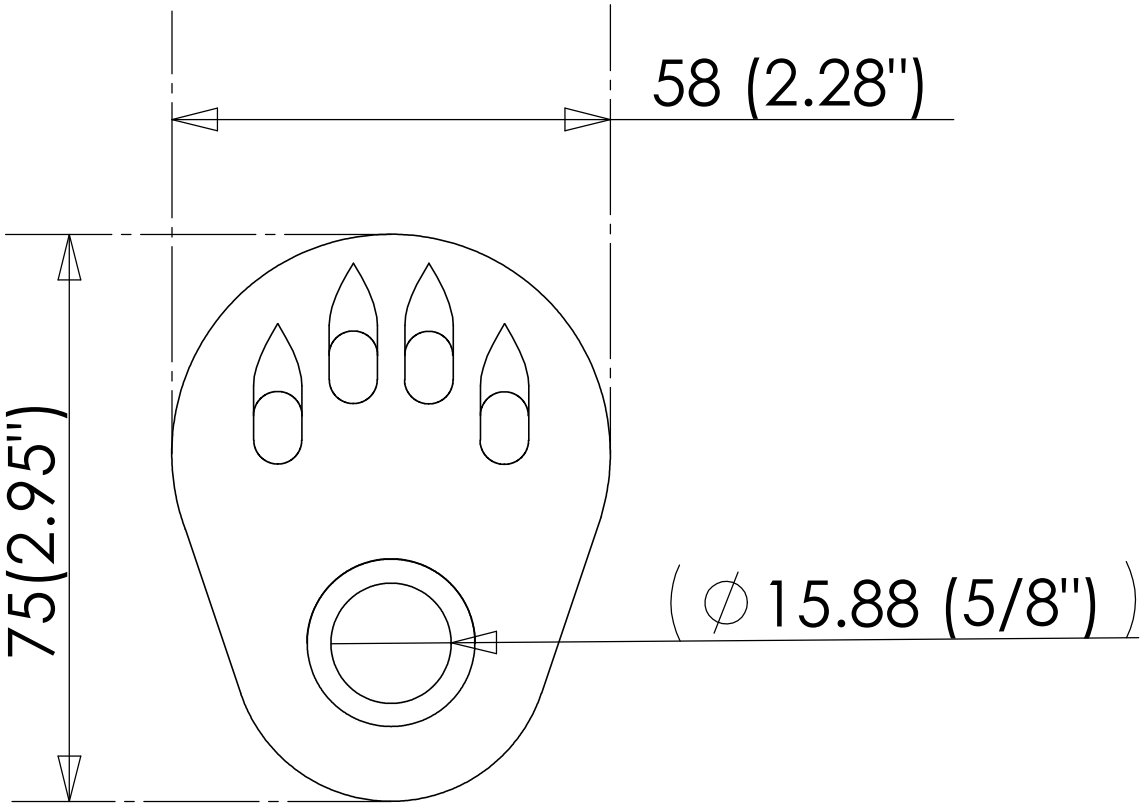


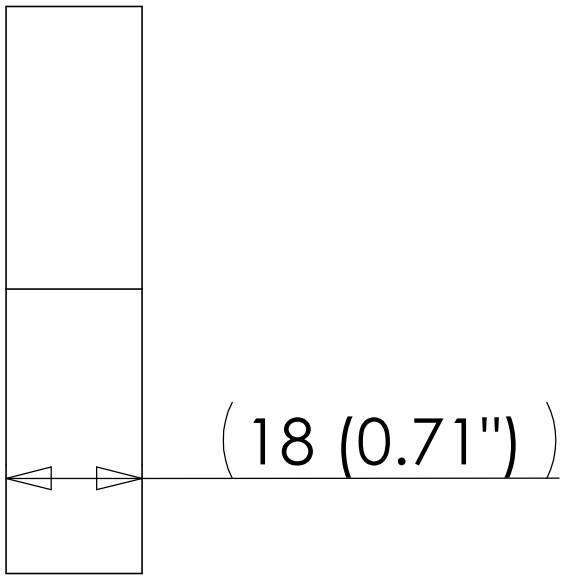


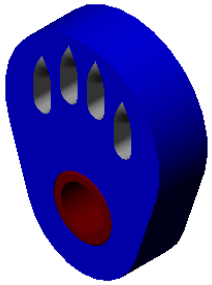

--

**PROPRIETARY AND CONFIDENTIAL**

THE INFORMATION CONTAINED IN THIS DRAWING IS THE SOLE PROPERTY OF COLLIGO MARINE.
ANY REPRODUCTION IN PART OR AS A WHOLE WITHOUT THE WRITTEN PERMISSION OF COLLIGO MARINE IS PROHIBITED.

| NEXT ASSY | USED ON |
|---|---|
| APPLICATION | |

MATERIAL

FINISH

DO NOT SCALE DRAWING

| | NAME | DATE |
|---|---|---|
| DRAWN | JEFranta | 11/8/07 |
| CHECKED | | |
| ENG APPR. | | |
| MFG APPR. | | |
| Q.A. | | |

COMMENTS:

Colligo Engineering and Design, LLC

MALE DISTRIBUTOR 11_13

| SIZE | DWG. NO. | REV. |
|---|---|---|
| A | MD 11_13 | |

SCALE:1:1 | WEIGHT: | SHEET 1 OF 1